HEBEL CORRIDOR WALLS

FOR MAXIMUM FLOOR SPACE WITH CONCEALED SERVICES ON ONE SIDE

HEB 1170 - 1171

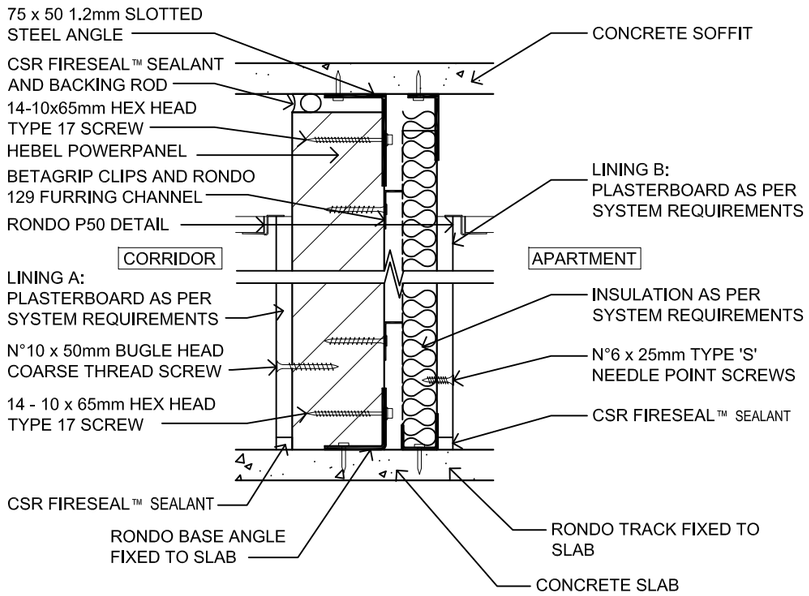

VERTICAL CROSS SECTION DETAIL A-A

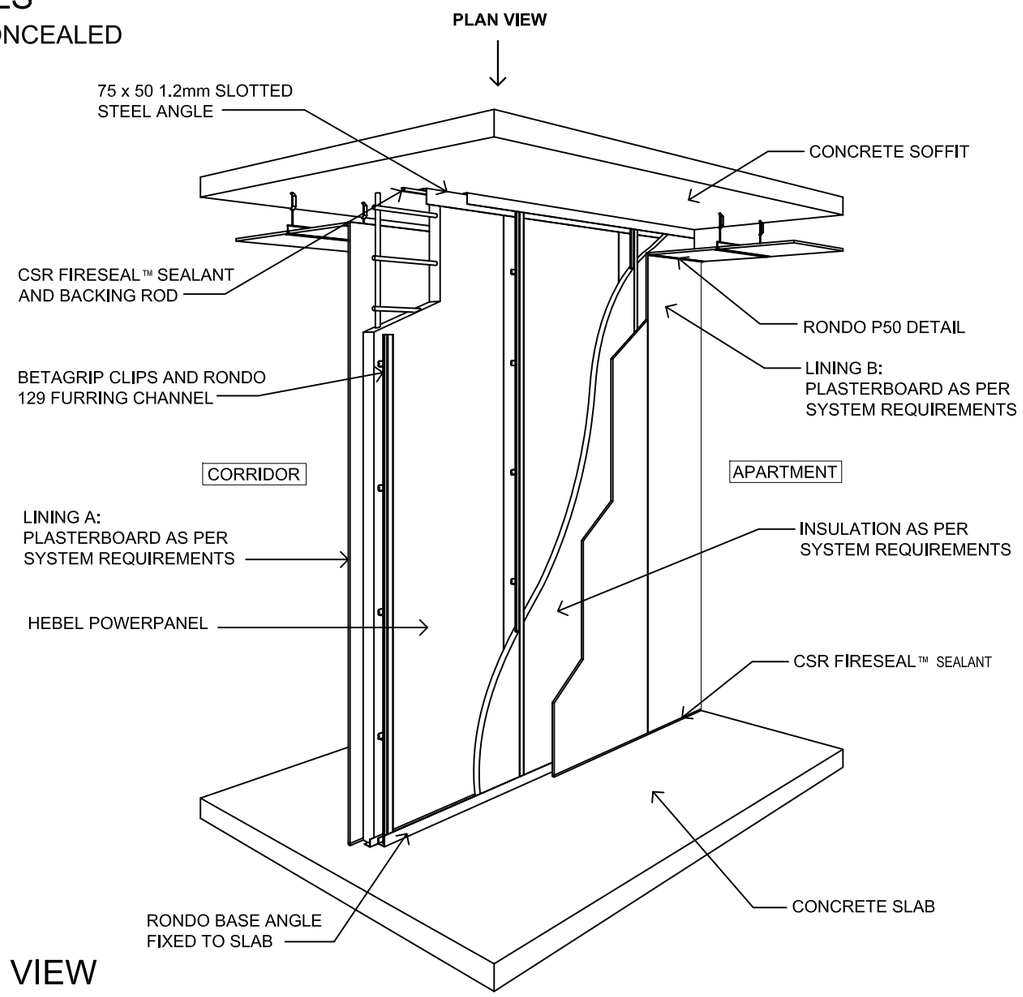

ISOMETRIC VIEW

NTS

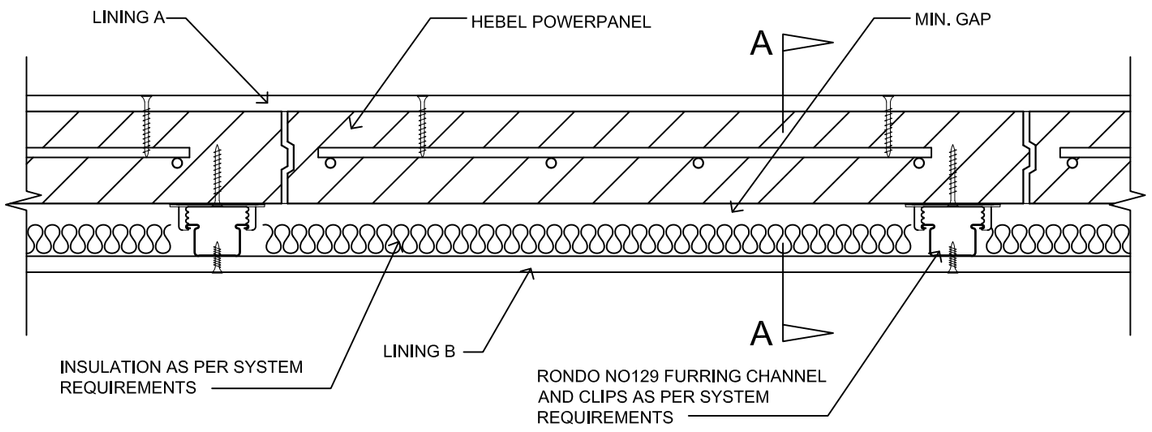

DETAIL PLAN VIEW

CORRIDOR WALL									
CODE	APPLICATION	WALL THICKNESS	WALL HEIGHT 'H'	FRL (B)	R_w	SYSTEM COMPONENT VARIATIONS			
						LINING A	MIN. GAP	INSULATION (A)	LINING B
HEB1170	DRY TO DRY	144mm	UP TO 3.3m HIGH	-/90/90 FOR WALL HEIGHTS UP TO 3.3m	52dB	13mm GYPROCK CD	43mm	50mm GLASSWOOL (11kg/m³) OR 50mm POLYESTER (14kg/m³)	13mm GYPROCK CD
HEB1171	DRY TO WET	144mm	UP TO 3.3m HIGH	-/90/90 FOR WALL HEIGHTS UP TO 3.3m	53dB	HEBEL SIDE - 13mm GYPROCK CD	43mm	50mm GLASSWOOL (11kg/m³) OR 50mm POLYESTER (14kg/m³)	STUD SIDE - 13mm AQUACHEK

REFER TO DESIGN AND INSTALLATION GUIDES FOR HIGH RISE INTERTENANCY AND SERVICE WALLS (HEB 1354) FOR MORE CONSTRUCTION AND PRODUCT INFORMATION. 13mm AQUACHEK CAN BE REPLACED BY 9mm FIBRE CEMENT SHEETING AND ACHIEVE THE SAME FRL AND ACOUSTICS.

FOR WALLS > 3.3m AND ≤ 4.65m, POWERPANEL SP CAN BE USED AND WILL ACHIEVE A FRL OF -/120/120. REFER TO DESIGN AND INSTALLATION GUIDES FOR SHAFT AND SCISSOR STAIR WALLS (HELIT 032) FOR MORE DETAILED INFORMATION.

CSR BUILDING PRODUCTS LTD
Head Office: Triniti 3, 39 DELHI RD, NORTH RYDE NSW 2113
LOCKED BAG 1345, NORTH RYDE BC NSW 1670
A.B.N. 55 008 631 356 Ph: 1300 369 448
www.hebelaustralia.com.au

hebel The better way to build
CSR Building Products Limited
A.B.N. 55 008 631 356
112 Wisemans Ferry Road
Somersby, NSW 2500
Phone: (02) 4340 3380
Fax: (02) 4340 3300

SYSTEM CODE	TITLE			
HEB1170 - HEB1171	HEBEL CORRIDOR WALLS			
DESIGN GUIDE REFERENCE	SCALE	SHEET SIZE	DRAWN	DATE
---	1:5 @ A3	A3	DG	22.04.15
		SHEET NO.	CHECK	REVISION
		1 of 1	CW	B